HOW-TOs

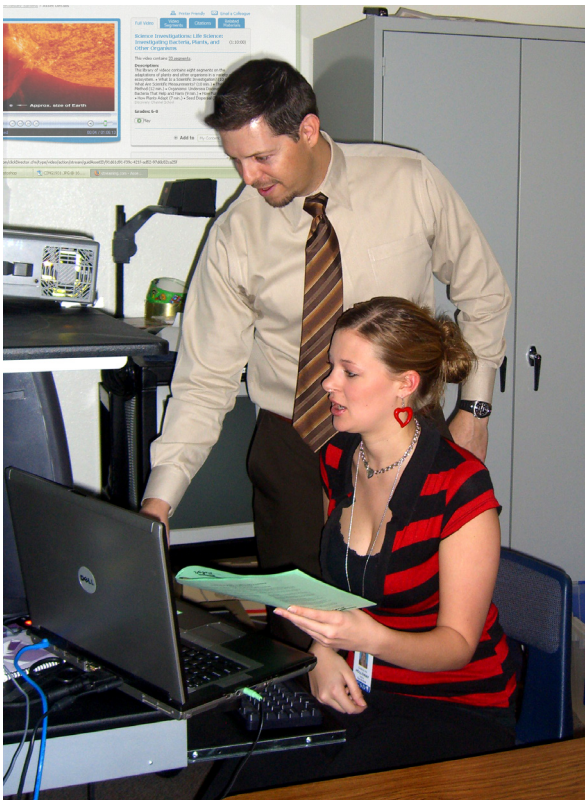

Manual Channel Set Up 97

Modulator Setup 98

To Use A Video Camera Connect 100

TV Set Up 97

TV Setup

General Instructions

- Note for TV setup in the library, select Cox Cable on the A/B switch.

1. Turn the VCR off (if one is attached).
2. Turn the TV on to Channel 4.
3. Push the "Menu" (or "Action") button to access the setup menus.
4. Search for and select the menu "Setup" ("Channel Setup" or "Tuner Setup").
5. Next, select, "Antenna/Cable," ("Antenna" or "Tuner Mode").
6. Here you will select the option of "Cable" ("CATV" or "Cable STD").
7. Auto Channel Memory may begin without further input. If not, select, "Auto Channel Memory ("Auto Set" or "Start").

Manual Channel Setup

1. Complete Steps 1-6 above
2. Select "Channel add/delete."
3. Enter the channel number desired and select.

*For Setup instructions specific to your TV model, please refer to the user's manual. Manuals for your model can also be found online in the "User Support" areas of most vendors' websites.

"HOW-TOs"

CONNECTING COX CABLE TO THE MODULATOR

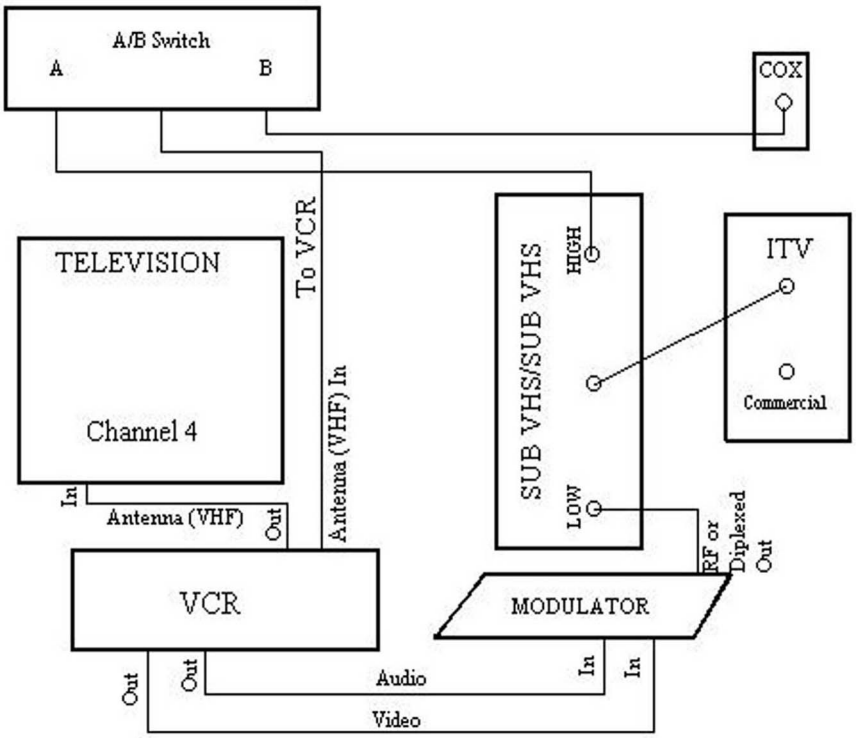

TO WATCH ITV:

- Turn on TV.
- Select channel on TV.

TO RECORD ITV:

- Turn on TV and VCR.
- TV/VCR switch should be on VCR position.
- Switch on back of VCR (3 or 4) should be on 4.
- Select desired channel on VCR.
- TV should be on channel 4.
- Insert videotape and press RECORD.

NOTE: To watch one show while recording another, switch TV/VCR button on VCR to TV and manually switch selector knob on TV to desired channel. The VCR will still be recording what channel is showing on the VCR.

"HOW-TOs"

TO USE THE MODULATOR:

- Turn on all equipment.
- Insert a videotape and press PLAY.
- Turn TV to Channel 4. This allows you to view the video and audio directly from the tape.
- Push VCR/TV button to TV and turn selector on TV to channel 6. This allows you to view the tape as it is seen in the other classrooms.

You may install your video camera into you VCR to do live productions using your modulator.

TO TEST THE MODULATOR:

- Turn on all equipment.
- Insert tape and press PLAY.
- Turn on TV to Channel 4. This allows you to view the video and audio directly from the tape.
- Push VCR/TV button to TV and turn selector on TV to Channel 6. This allows you to view the tape as it is seen in the other classrooms.

TO BROADCAST COX CABLE:

Test the modulator first before you try to broadcast a Cable Channel as you cannot see what is being broadcast from your TV. You will have to check another TV.

- Position **A/B switch** on the cable side.
- Put VCR on desired cable channel. VCR must first be set up. See "VCR Setup."

TO RECORD FROM COX CABLE:

- See "VCR Recording."

"HOW-TOs"

TO USE A VIDEO CAMERA CONNECT

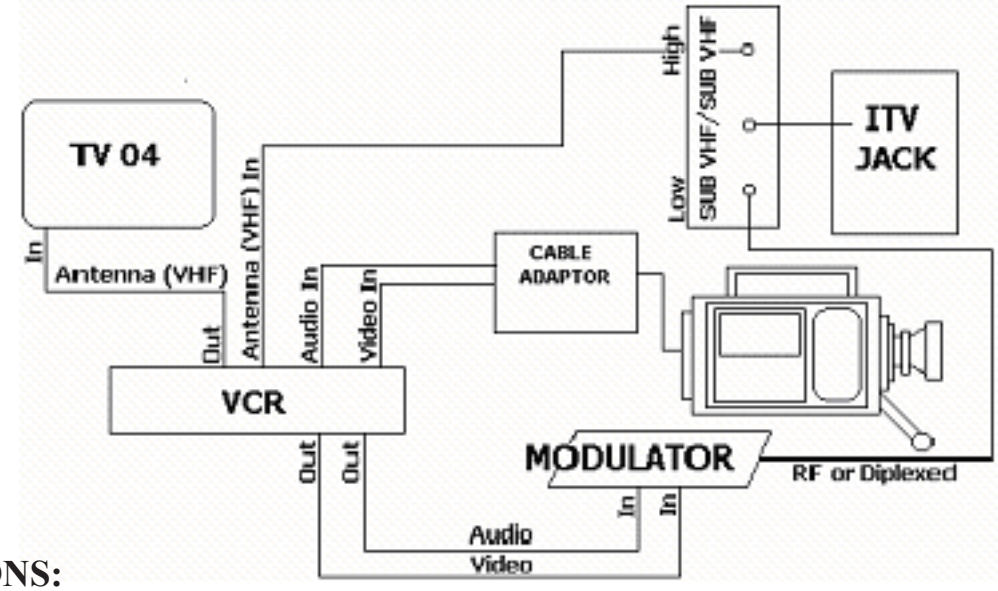

DIRECTIONS:

1. Connect all pieces of equipment according to diagram.
2. Turn on all equipment.
3. Put blank tape in camera and VCR (if you wish two copies).
4. Put VCR on line instead of a channel.
5. Start shooting.

TO COPY A TAPE FROM A TAPE

- Turn on the TV to Channel 4.
- Insert videotape into VCR 1.
- Using a coax cable, take the antenna out (may be labeled as TV out) into the antenna in on VCR 2.
- Using a coax cable, take the antenna out on VCR 2 and plug it into the TV antenna.
- VCR 2 should be turned to Channel 4.
- Play the tape in VCR 1. You should see the tape from VCR 1 on the TV. Adjust the tracking to get the best possible picture.
- Place the tape you want to record ON in VCR 2.
- Put VCR 2 into record.
- Press PLAY on VCR 1.
- When you have completed the copy, stop the play tape and then the record tape.

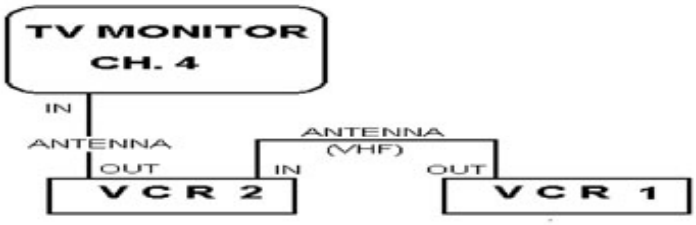

To learn more about producing television at your school, please call the Educational Media Services at Vegas PBS, 799-1010 x 5354.